Protein-DNA Docking Via a Structure-Based Approach

Dr. Bo Hong, ECE, GaTech
Dr. Juntao Guo, CCI, UNC Charlotte

- Goal
  - Identify transcription-factor binding sites (TFBS) at the genomic scale
- Method
  - Semi –flexible docking that combines energy computation and conformational search
- Impact
  - Key to understanding transcription regulatory networks
  - Applications in drug design, genetic engineering, etc.

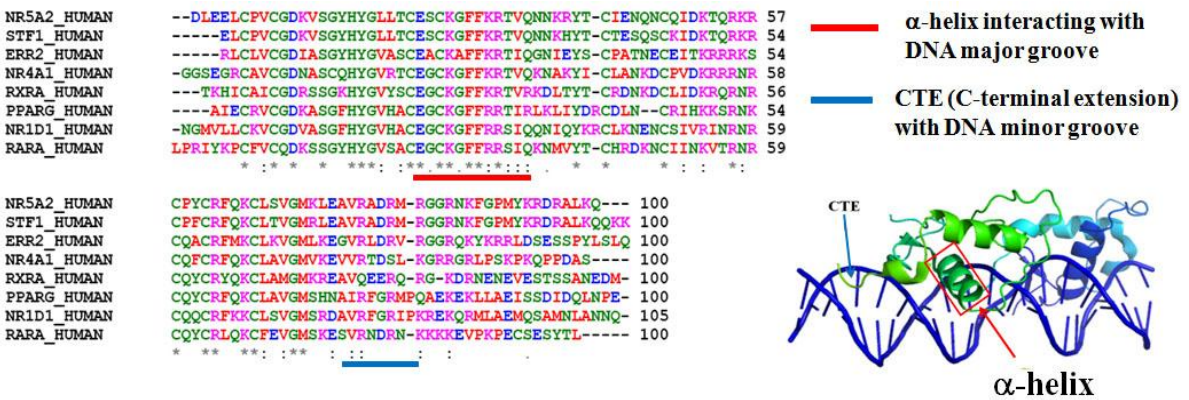

- GPU Computation and Keeneland Usage
  - Monte-Carlo type task level parallelism
  - Fine-grained massive parallelism per task at the atomic level
  - Speedup: 32 Keeneland Tesla 2050 GPUs ~= 1200 2.4GHz Xeon CPUs

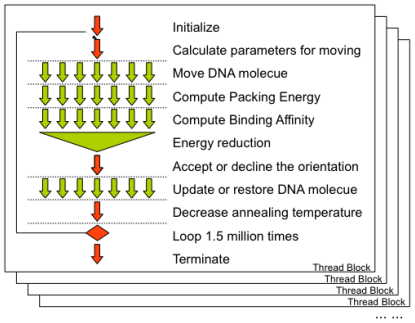

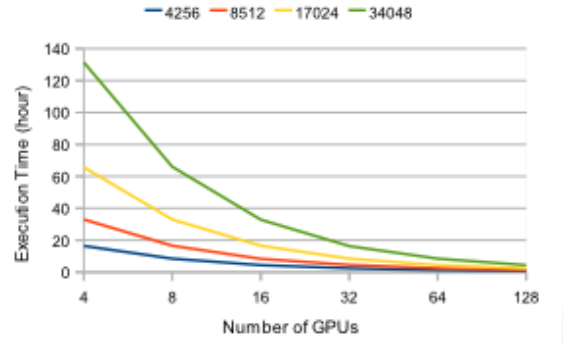

- Further Plan:
  - Use massive GPU computing capability of Keeneland to further improve docking quality: finer-grained energy calculation, population-based conformational search
- Publications:
  - Bo Hong, Jiadong Wu and Jun-tao Guo, *Improving Prediction Accuracy of Protein-DNA Docking with GPU Computing, IEEE BIBM 2011*
  - Bo Hong, Jiadong Wu and Jun-tao Guo, *A GPU-Based Approach to Accelerate Computational Protein-DNA Docking, submitted to IEEE CiSE, under review*

Georgia Tech NICS THE UNIVERSITY of TENNESSEE OAK RIDGE National Laboratory NVIDIA hp NSF